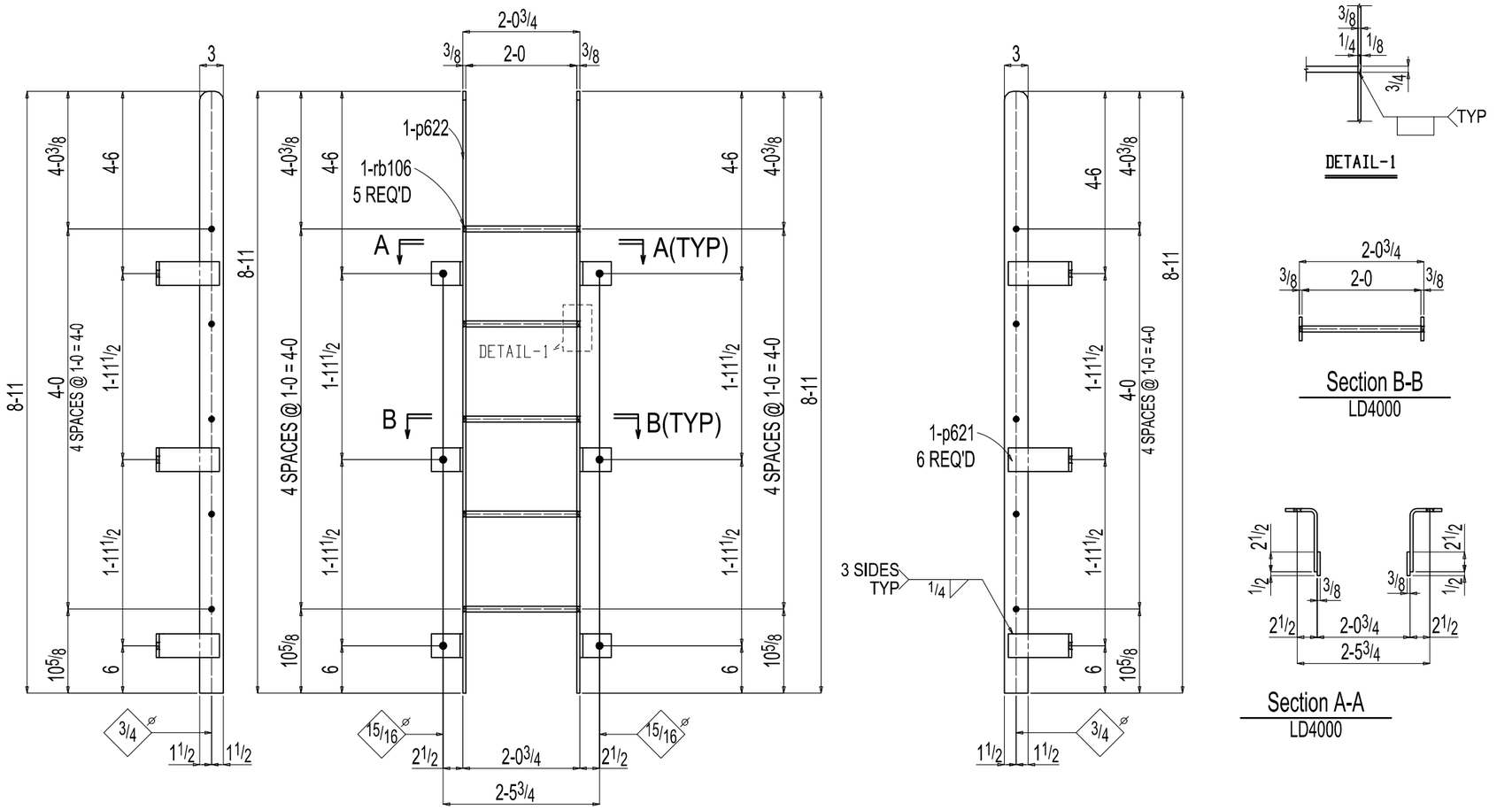

ONE LADDER LD4000

BILL OF MATERIAL

QTY TOTAL	PIECE MARK	MINOR MARK	DESCRIPTION	LENGTH		REMARKS	WEIGHT UNIT	WEIGHT TOTAL
ONE	LD4000		LADDER			Galv	105	105
2		p622	PL 3/8x3	8	11	BENT A36	34	68
5		rb106	RB 3/4	2	0 1/2	A36	3	15
6		p621	PL 3/8x11 5/16	0	3	BENT A36	4	22
			FIELD BOLTS					
6			3/4 Dia EXPANSION	0	5			

Total weight : 105